REV D	CHANGE CODE TO MIL-STD-2073	MD	EMS	11/99

1. PRESERVATION AND PACKAGING:

PER MIL-STD-2073: 4V18900ZZZZZA00
QUP = 001 ICQ = 000

2. CUSHIONING:

Elastomeric shock-mounted support frame located in container base.

3. CONTAINER:

See Container Research Corporation drawing (05259)384E001
Container O.D. 58.43 x 52.18 x 48.67
Container Cube 85.9 ft.
Container Tare Wt. 475
Container Gr. Wt. 827
NSN 6KH8145-01-175-8676

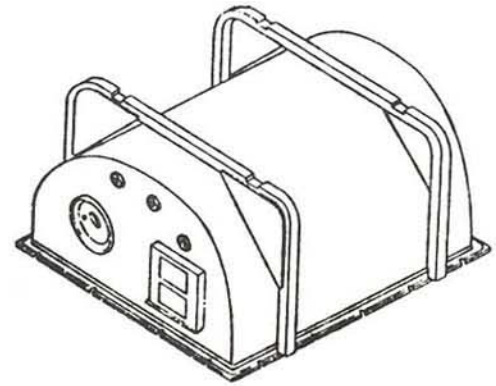

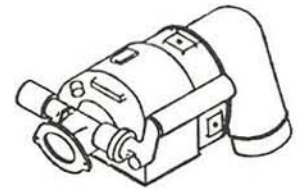

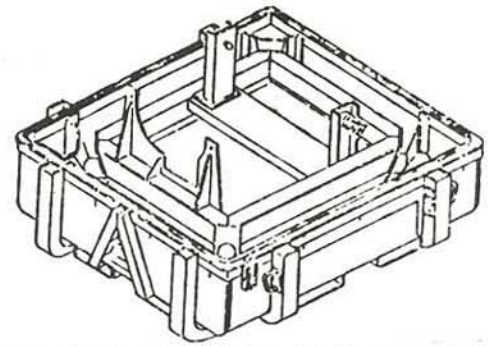

	DATE	NAVAL INVENTORY CONTROL POINT		
DRAWN BT	4/92	PACKAGING INSTRUCTIONS FOR: AUXILIARY GAS TURBINE		
APP EHB	4/92			
DIMENSIONS IN INCHES		CODE IDENT. 80132	DWG. NO. 15614-1	REV. D
TOL ± .125		SCALE	SHEET 1 OF 1	

HEBP Co. P3MA N15749